I²C BUS NTSC 1 CHIP FOR COLOR TV

The KA2163 is a monolithic integrated circuit for VIF, SIF, chroma and deflection circuit of NTSC color TV. The KA2163 also provides audio / video switch and OSD interface. It combines these functions in a 56 SDIP package and the KA2163B also includes I²C bus control functions for automatically adjustment.

56-SDIP-600

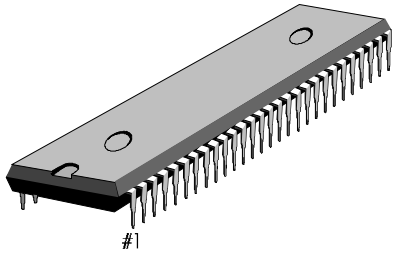

FUNCTIONS

- VIF/SIF
- Video
- Chroma
- Deflection
- OSD interface
- I²C bus circuit

ORDERING INFORMATION

Device	Package	Operating Temperature
KA2163	56 -SDIP	-20¡É ~ +65¡É

FEATURES

VIF CIRCUIT
- PLL type IF demodulation (bus alignment)
- Adjustment free AFT without tank coil
- RF AGC output (delay point : bus alignment)
- Dual time constant fast AGC

SIF CIRCUIT
- Inter carrier SIF system
- External sound select switch (bus select)
- Attenuator circuit

VIDEO CIRCUIT
- Black stretcher
- DC Restoration circuit
- D.L aperture compensate circuit (bus control)
- Internal filter auto-adjust circuit (fsc link type)
- Uni-color circuit(bus control)
- Y delay line circuit

CHROMA CIRCUIT
- Color control circuit (bus control)
- Tint control circuit

OSD CIRCUIT
- Linear RGB input
- Cut off / Drive adjustment (bus adjustment)
- RGB primary color output

DEFLECTION CIRCUIT
- Auto-slicer type high performance
- Sync. separator circuit
- Adjustment free countdown system
- Sync. separation output
- X-ray protect circuit
- Vertical ramp output
- Dual time constant AFC circuit
- Horizontal and Vertical position bus adjustment
- Vertical amplitude adjustment (bus adjustment)

BLOCK DIAGRAM

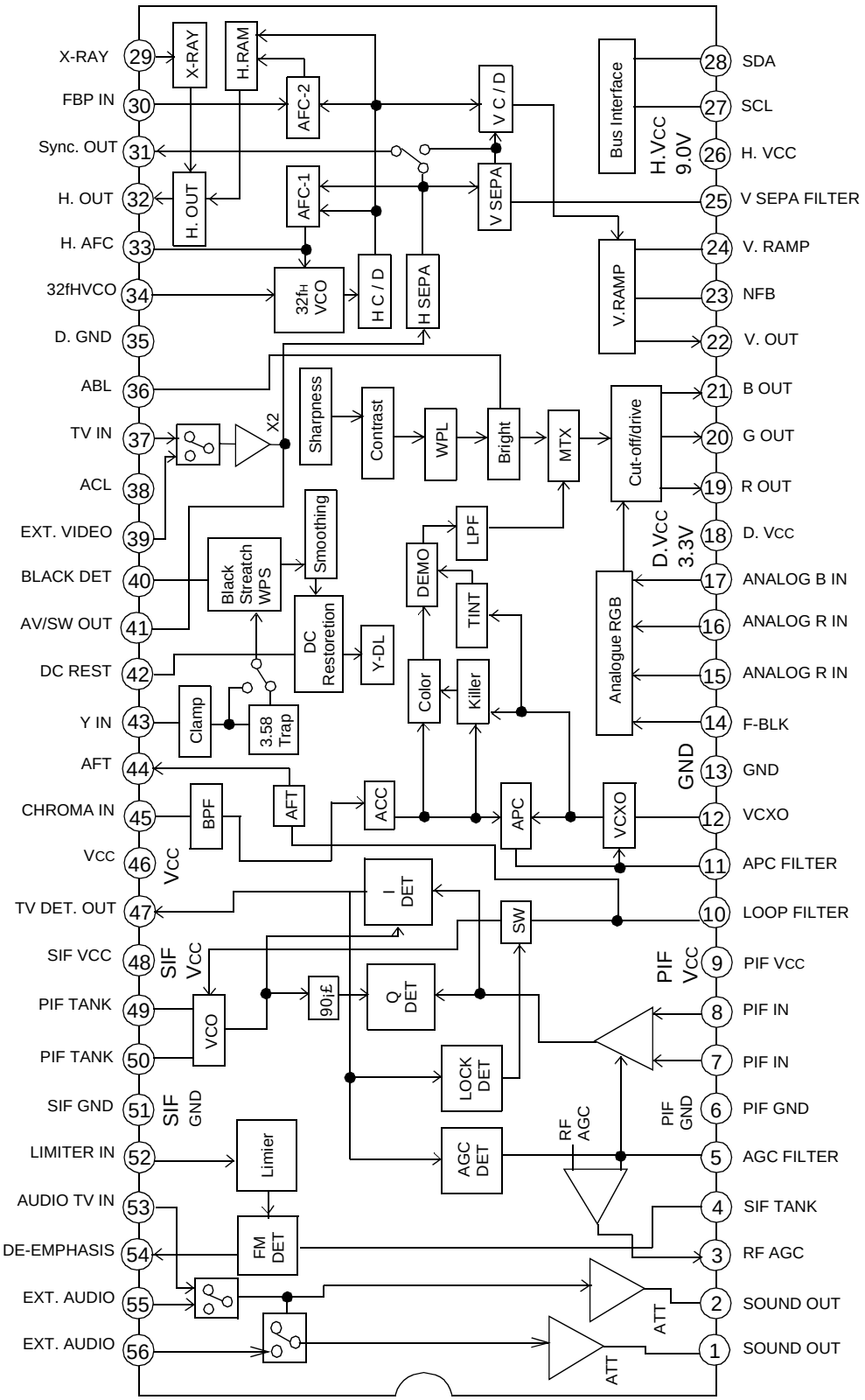

TERMINAL FUNCTION

PIN NO.	PIN NAME	FUNCTION	INTERFACE CIRCUIT
1 2	Sound Output	This terminal is for Sound Output. The maximum flew out current of these terminals is 3.6mA. So, the minimum load resister is 1k¥Ø .	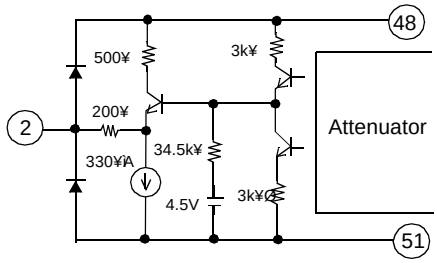
3	RF AGC	This terminal is for RF AGC output.	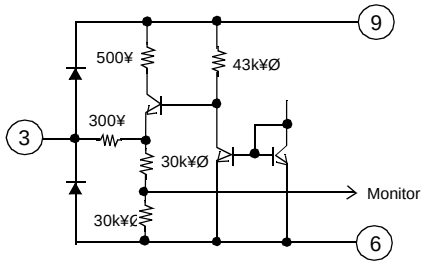
4	SIF Tank Coil	This terminal is for connecting SIF detect tank coil. This terminal is for Sound Mute Switch, too. If this terminal is connected to GND, the sound output is muted.	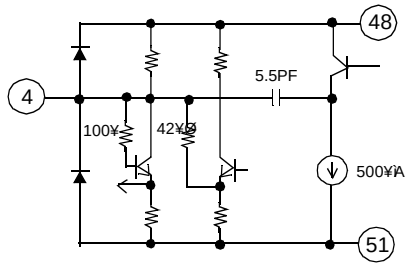
5	AGC Filter	This terminal is for PIF 2nd AGC filter.	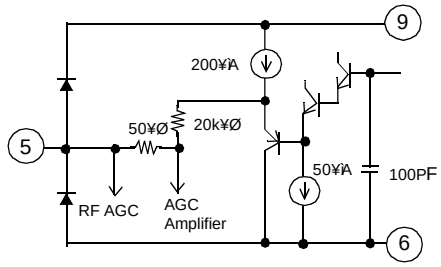
6	PIF GND	This terminal is for GND of PIF circuit.	—
7 8	PIF Input	This terminal is for IF input. The typical input value is 90dB¥V.	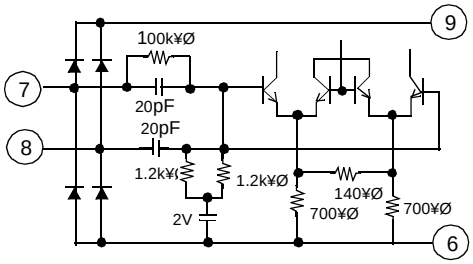

PIN NO.	PIN NAME	FUNCTION	INTERFACE CIRCUIT
9	PIF Vcc	This terminal is for Vcc of PIF circuit.	—
10	Loop Filter	This terminal is for PIF PLL loop filter.	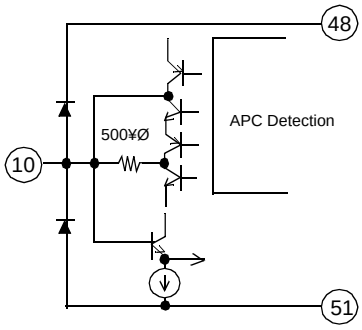
11	APC Filter	This terminal is for APC filter of fsc oscillation.	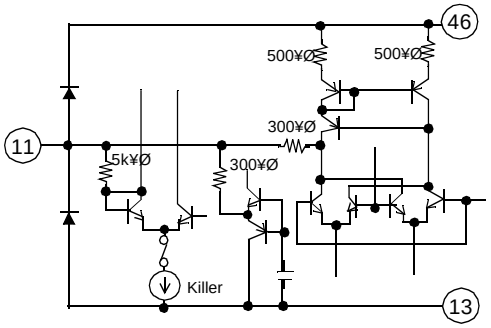
12	VCXO	This terminal is for X'tal of 3.58MHz VCXO.	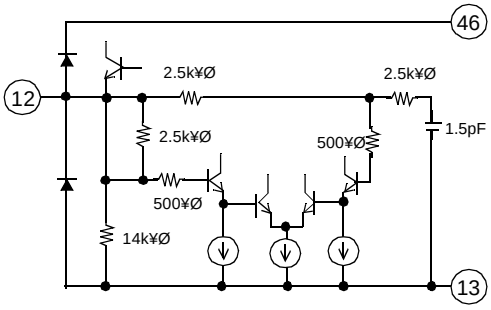
13	GND	This terminal is for V/C/D GND.	—
14	Fast Blanking	This terminal is for fast blanking of RGB input.	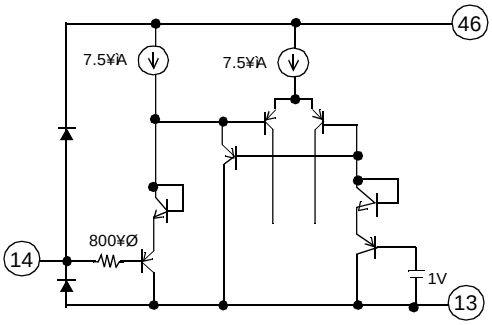

PIN NO.	PIN NAME	FUNCTION	INTERFACE CIRCUIT
15 16 17	Analog RGB Input	These terminals are for RGB signal input.	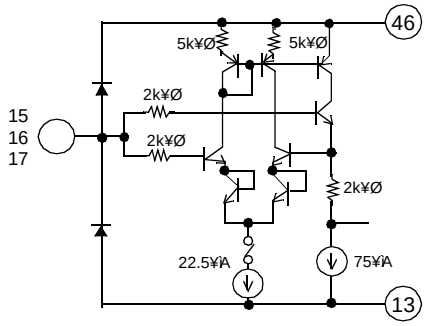
18	Digital Vcc	This terminal is for Vcc of digital curcuit.	—
19 20 21	RGB Output	This terminal is for RGB primary color signal output.	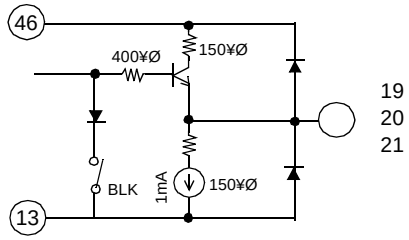
22	Vertical Output	This terminal is for vertical pulse output.	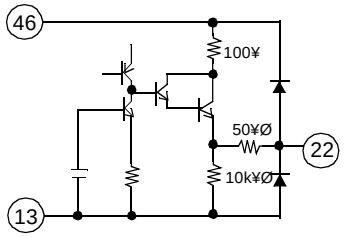
23 24	NFB, Vertical Ramp.	These terminals are for NFB input and vertical ramp output.	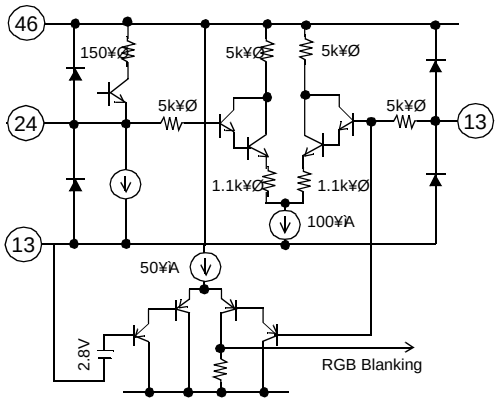

PIN NO.	PIN NAME	FUNCTION	INTERFACE CIRCUIT
25	Vertical Sync. Separation Filter	This terminal is for vertical sync. separation filter.	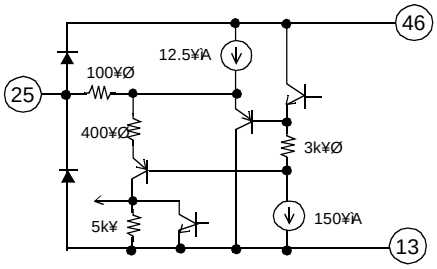
26	H. Vcc	This terminal is for Vcc of horizontal circuit	—
27 28	SCL, SDA	These terminals are for input and output of I²C Bus.	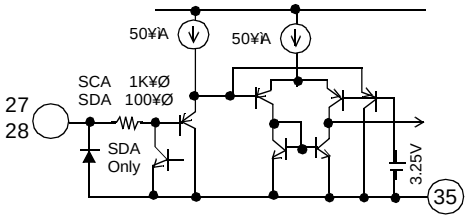
29	X-RAY	This terminal is for input of X-RAY protect signal.The threshold voltage is 3.5V (Typ.). If applied voltage is more than threshold voltage, the X-RAY protect circuit will make horizontal output a low.	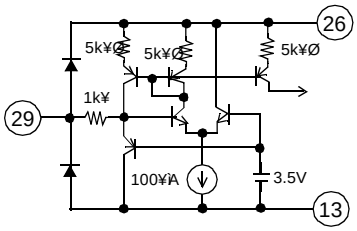
30	Fly-back Pulse Input	This terminal is for Fly-back pulse input. The Fly-back pulse is the reference of AFC circuit, gate pulse and so on. The current needs to keep under 1mA.	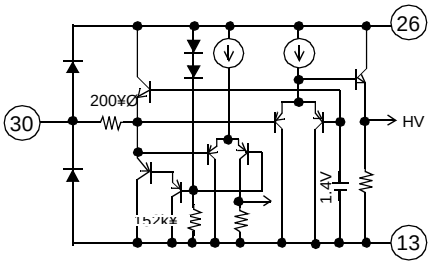
31	Sync. Pulse Output	This terminal is for Sync. pulse output.	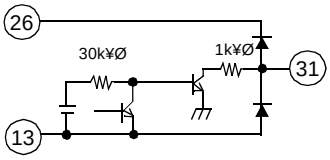

PIN NO.	PIN NAME	FUNCTION	INTERFACE CIRCUIT
32	Horizontal Output	This terminal is for horizontal pulse output.	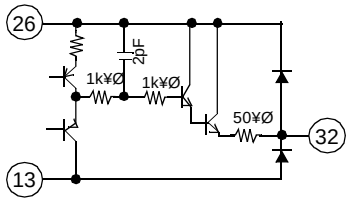
33	H. AFC	This terminal is for horizontal AFC filter. The AFC circuit fits the phase between inputed horizontal sync. signal and horizontal pulse which is made by countdown 32fH.	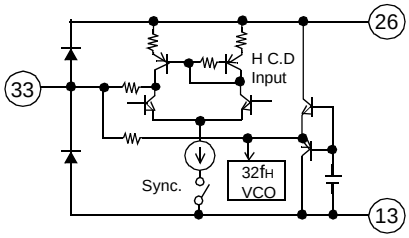
34	32fH VCO	This terminal is for connecting ceramic oscillator. That constitutes 32fH (503kHz) oscillation circuit. The CSB503F30 (Murata) is recommended.	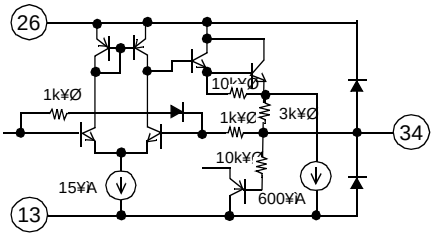
35	D. GND	This terminal is for GND of digital circuit.	—
36	A.B.L	This terminal is for A.B.L circuit.	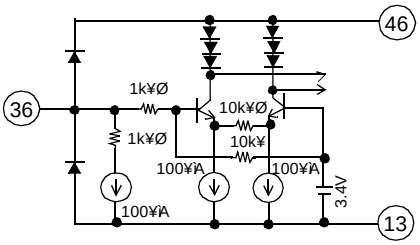
37	TV Input	This terminal is for input of PIF detected signal. The typical input amplitude is 1.0Vp-p.	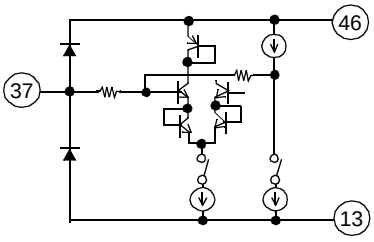

PIN NO.	PIN NAME	FUNCTION	INTERFACE CIRCUIT
38	A.C.L	This terminal is for ACL circuit	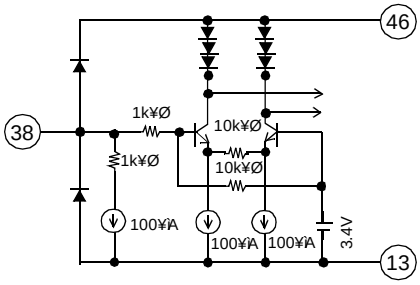
39	External Video Input	This terminal is for input of external video signal.	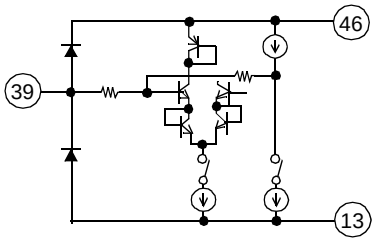
40	Black Peak Detection	This terminal is for filter of black peak detection.	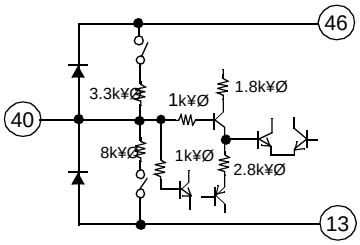
41	Video Switch Output	This terminal is for output of video switch which selects TV signal or external video. Amplifier Gain is (Min.) 1.7 (Typ.) 1.9, (Max.) 2.1 .	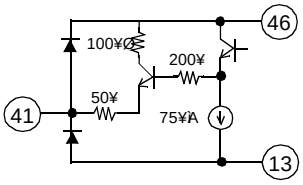
42	D.C. Restoration	This terminal is for filter of APL detection.	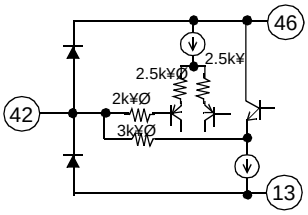

<table>
<tr><th>PIN NO.</th><th>PIN NAME</th><th>FUNCTION</th><th>INTERFACE CIRCUIT</th></tr>
<tr><td>43</td><td>Y Input</td><td>This terminal is for Y signal input.
The typical input amplitude is 1.0Vp-p.</td><td> 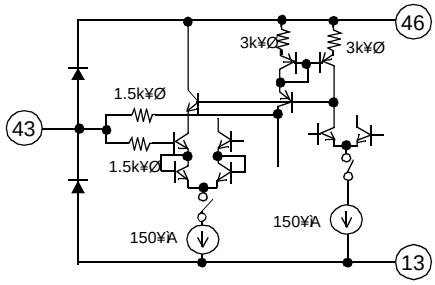
</td></tr>
<tr><td>44</td><td>A.F.T.</td><td>This terminal is for AFT output.
Monitor signal output mode can be selected via Bus.
<table>
<tr><th>B0 B1</th><th>OUTPUT</th></tr>
<tr><td>0 0</td><td>AFT</td></tr>
<tr><td>0 1</td><td>TEST purpose only</td></tr>
<tr><td>1 0</td><td>B</td></tr>
<tr><td>1 1</td><td>RF AGC/2</td></tr>
</table></td><td> 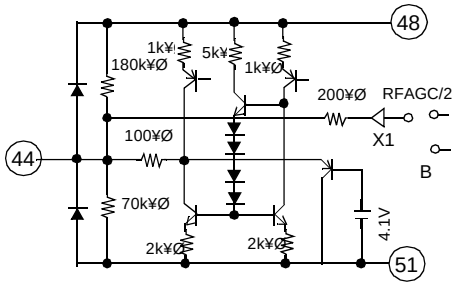
</td></tr>
<tr><td>45</td><td>Chroma Input</td><td>This terminal is for chrominance signal input.
The typical input signal amplitude is 286mVp-p (at burst signal).
This IC is to go to test mode with this terminal voltage higher than 4.5V.</td><td> 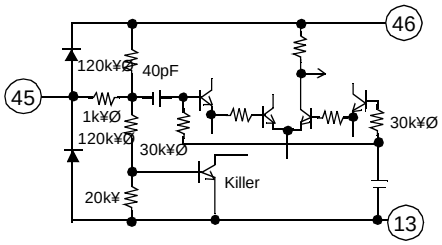
</td></tr>
<tr><td>46</td><td>V / C / D Vcc</td><td>This terminal is for Vcc of video, Chroma and Deflection circuit.</td><td>—</td></tr>
<tr><td>47</td><td>TV Detection Output</td><td>This terminal is for PIF detected signal output.</td><td rowspan="2"> 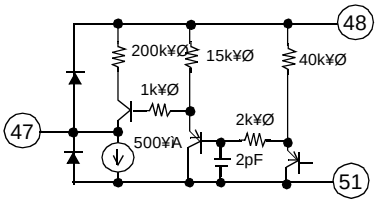
</td></tr>
<tr><td>48</td><td>S.I.F. Vcc</td><td>This terminal is for Vcc of SIF circuit.</td><td>—</td></tr>
</table>

PIN NO.	PIN NAME	FUNCTION	INTERFACE CIRCUIT
49 50	P.I.F. Tank Coil	These terminals are for connecting a tank coil of PIF detection circuit. TOKO Corp. products 292GJAS-7475BS(45.75MHz), 292GJAS-7476BS (58.75MHz) are recommended.	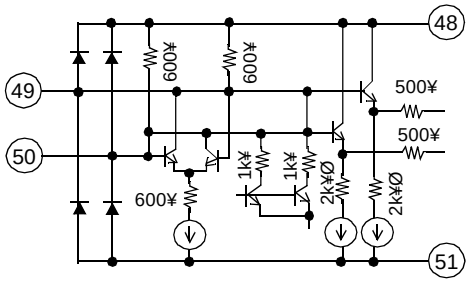
51	S.I.F. GND	This terminal is for GND of SIF circuit.	—
52	Limiter Input	This terminal is for input of SIF limiter amplifier circuit.	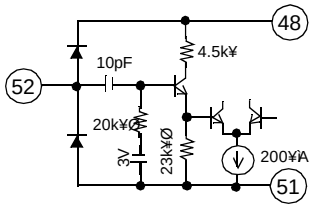
53	TV Audio Signal Input	This terminal is for input of SIF detected signal. This terminal is connected to pin 54 via capacitor.	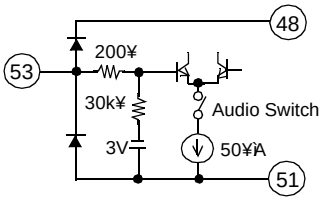
54	De-emphasis	This terminal for filter of SIF de-emphasis.	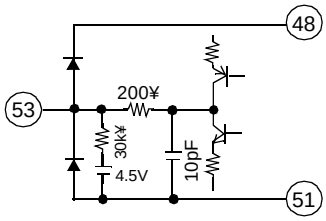
55 56	External Audio Input	These terminals are for external audio input.	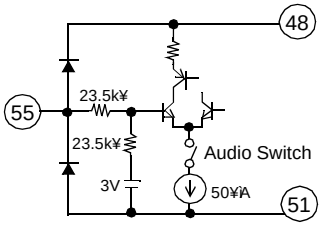

Slave address : 88H

SUB ADDRESS	D7	D6	D5	D4	D3	D2	D1	D0	PRESET
00	Trap	Color							0000 0000
01	C.Filter	Tint							1100 0000
02	A. SW	Brightnes							0000 0000
03	BLK	Uni-color							0000 0000
04	Mute		Sharpness						0110 0000
05	Vertical Phase			Horizontal Phase					0001 0000
06	B0	B1	Audio Attenuator						0000 0000
07	B2	B3	DON'T USE (Fix on 100000)						0010 0000
08	B4	V. SW	RF AGC						0000 0000
09	AFC	WPL	Vertical Amplitude						0010 0000
0A	V.Fixed	PIF VCO							0100 0000
0B	R Cut OFF								0000 0000
0C	G Cut OFF								0000 0000
0D	B Cut Off								0000 0000
0E	R Gain								0000 0000
0F	B Gain								0000 0000

FUNCTION	RANGE (MIN. ~ MAX.)	DEFAULT
Color	-60 ~ 0dB	-60dB
TINT	ƒ¾ 42ƒ£	0ƒ£
Brightness	1.34 ~ 2.6 ~ 3.86V	1.34V
Uni-Color	-24 ~ 0dB	-24dB
Sharpness	-18 ~ 6dB ~ 14dB (4MHz Gain)	6dB
Audio ATT	-85 ~ 6dB	-85dB
RF AGC	65dB¥ì~ 105d¥Ⅴ (0.6dB / bit), 000000 : IF Mute	IF Mute
Ver. Amplitude	1.6 ~ 2.4V	Center
PIF VCO	ƒ¾ 2.2MHz (35kHz / bit)	Center
RGB Cut-off	-0.4 ~ 0.4V	-0.4V
RB Gain	-3.1 ~ 3.1dB	-3.1dB

FUNCTION	RANGE (MIN. ~ MAX.)	DEFAULT
3.58 Trap	(0) : On / (1) : Off	On
Chroma Filter	(0) : Band Pass Filter / (1) : Take Off Filter	TOF
A, V SW	(0) : TV Mode / (1) : EXT. Mode	TV
BLK	(0) : BLK On / (1) : BLK Off	On
MUTE	(00) : Off / (01) : Y MUTE / (10) : Hout Stop / (11) : Y MUTE + V Stop	(01)
H. AFC	(0) : AFC2 Normal / (1) : AFC2 x 3	(0)
WPL	(0) : On / (1) : Off	Off
V. Fixed Mode	(0) : Normal / (1) : V Frequency 60Hz Fix	Normal
B_0, B_1 (Monitor)	Pin 44's output is selectable. (00) : AFT Voltage / (01) : Test Mode / (10) : Blue Output / (11) : Half of RF AGC Voltage	AFT Voltage
B_2, B_3, B_4 (Test Mode)	Bits for Test Mode. Use this IC with these bits (000).	(000)

Read Mode

D7	D6	D5	D4	D3	D2	D1	D0
POR	AFT	IF Lock	AFT	-	V Lock	H Lock	X-RAY

FUNCTION	CONTENTS
POR (Power On Reset)	(0) : SECOND / (1) : FIRST
AFT	Refer to Following Figure
IF LOCK	(0) : LOCK OUT / (1) : LOCK IN
V LOCK	(0) : LOCK IN / (1) : LOCK OUT Det. Window : 262H ~ 263H
H LOCK	(0) : LOCK OUT / (1) : LOCK IN This function is forced to unlock at Vp, so data is valid after 50H.
X-RAY	(0) : X-RAY OFF / (1) : X-RAY ON

¡Û Vertical Phase (3bit)
This mode is for changing vertical output timing.
(Vertical picture position is changed 0 ~ 7H as right Table.)

¡Û Horizontal Phase (5bit)
This mode is for changing horizontal picture position.
Horizontal output phase is changed ¡¾ 3¥ì as maximum.

¡Û AFT Read Bus

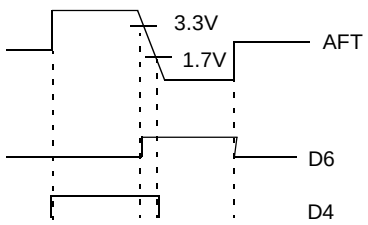

D_7	D_6	D_5	MODE
0	0	0	Reference
0	0	1	1H Delay
0	1	0	2H Delay
0	1	1	3H Delay
1	0	0	4H Delay
1	0	1	5H Delay
1	1	0	6H Delay
1	1	1	7H Delay

I²C BUS CONTROLLED FORMAT SUMMARY

Bus controlled format of KA2163B is based on I²C Bus Control format of Philips.

Data Transfer Format

S	Slave address	0	A	Sub address	A	Data	A	P

7 bit — MSB

8 bit — MSB

8 bit

S : Start Condition
P : Stop Condition
A : Acknowledge

(1) Start and Stop Condition

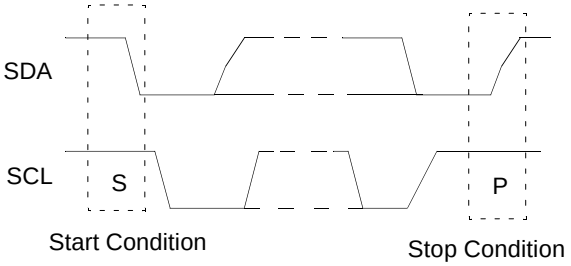

(2) Bit Transfer

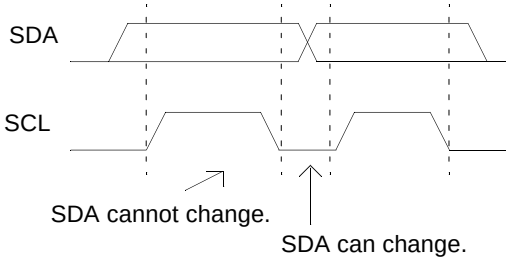

(3) Acknowledge

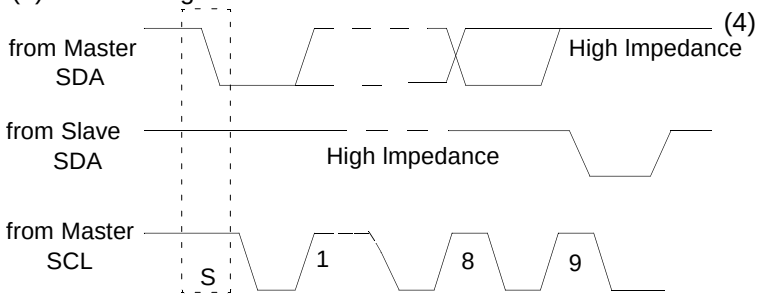

(4) Slave Address

A6	A5	A4	A3	A2	A1	A0	R/$\overline{W}$
1	0	0	0	1	0	0	0

Purchase of SAMSUNG I²C components conveys a license under the Philips license under the Philips I²C Patent Rights to use these components in an I²C system, provided that the system conforms to the I²C Standard Specification as defined by Philips.

MAXIMUM RATING (Ta = 25¡É)

CHARACTERISTIC	SYMBOL	RATING	UNIT
Power Supply Voltage	Vcc	12	V
Power Dissipation	PDmax	2.19 (Note1)	W
Input Terminal Voltage	Vin	GND - 0.3 ~ Vcc + 0.3	V
Input Signal Amplitude	ein	4	Vp-p
Operating Temperature	Topr	-20 ~ 65	¡É
Storage Temperature	Tstg	-55 ~ 150	¡É

(Note 1) When using the device at above Ta = 25¡É, decrease the power dissipation by 17.5mW for each increase of 1¡É.

(Note 2) As this IC is weak in a surge voltage, handle it with care from being damage.

RECOMMENDED OPERATING CONDITION

CHARACTERISTIC	SYMBOL	MIN.	TYP.	MAX.	UNIT	REMARKS
PIF Power Supply Voltage	V_{CCP}	8.5	9.0	9.5	V	-
SIF Power Supply Voltage	Vccs	8.5	9.0	9.5	V	-
V/C/D Power Supply Voltage	Vccv	8.5	9.0	9.5	V	-
H.Vcc Power Supply Voltage	H.Vcc	8.5	9.0	9.5	V	-
D.Vcc Power Supply Voltage	$D.V_{CC}$	2.7	3.3	3.8	V	-
TV External Video Input Level	Vin37/39	-	1.0	-	Vp-p	including sync.
Standard Video Input Level	Vin43	-	1.0	-	Vp-p	including sync.
Standard Chroma Input Level	Vin45	-	286	-	mVp-p	at burst signal
FBP Width	TFBP	10	12	-	¥ìs	Vth = 1.4V, Vcc - 1.4V
FBP Input Flow in Current	IFBPmax	-	-	2	mA	-
PIF Output Load Resister	ROP	2	8.2	-	k¥Ø	-
SIF Output Load Resister	ROS	1	8.2	-	k¥Ø	-
RGB Output Load Resister	RORGB	-	1.8	-	k¥Ø	-
Horizontal Output Load Resistor	RHOUT	330	800	-	¥Ø	maximum 10mA
Vertical Output Load Resister	RVOUT	4.1	5.7	-	k¥Ø	-
Sync. Separation Output Flow In Current	Isyncmax	-	-	1	mA	-

ELECTRICAL CHARACTERISTICS
DC CHARACTERISTICS (Unless Otherwise Specified, V_{CC} = 9V, Ta = 25¡É)

PIN No.	CHARACTERISTIC	SYMBOL	TEST CONDITION	MIN.	TYP.	MAX.	UNIT
2	Sound Output	V_2	-	3.20	3.70	4.20	V
3	RF AGC	V_3	-	-	0.00	0.50	V
4	SIF TANK	V_4	-	-	-	-	V
5	AGC Filter	V_5	-	7.00	7.50	8.00	V
6	PIF GND	GND	-	-	0.00	-	V
7	PIF Input	V_7	-	1.50	2.00	2.50	V
8	PIF Input	V_8	-	-	0.00	0.50	V
9	PIF Vcc	V_{CC}	-	-	9.00	-	V
10	Loop Filter	V_{10}	-	-	4.50	-	V
11	APC Filter	V_{11}	-	6.00	6.50	7.00	V
12	VCXO	V_{12}	-	5.30	5.80	6.30	V
13	V/C/D GND	GND	-	-	0.00	-	V
14	F-BLK	V_{14}	-	-	0.00	-	V
15	Analog R Input	V_{15}	-	4.40	4.90	5.40	V
16	Analog G Input	V_{16}	-	4.40	4.90	5.40	V
17	Analog B Input	V_{17}	-	4.40	4.90	5.40	V
18	D.Vcc	V_{CC}	-	-	3.30	-	V
19	R Output	V_{19}	BRT, C. O Cent	2.40	2.70	2.90	V
20	G Output	V_{20}	BRT, C. O Cent	2.40	2.70	2.90	V
21	B Output	V_{21}	BRT, C. O Cent	2.40	2.70	2.90	V
22	V out	V_{22}		-	-	-	-
23	NFB	V_{23}	-	-	-	-	-
24	V. Ramp	V_{24}		-	-	-	-
25	V SEPA	V_{25}	-	5.80	6.30	6.80	V
26	H. V_{CC}	V_{26}	-	-	9.00	-	V
27	SCL	V_{27}	-	4.50	5.00	5.50	V
28	SDA	V_{28}	-	4.50	5.00	5.50	V
29	X-RAY	V_{29}	-	-	0.00	-	V
30	FBP Input	V_{30}	-	-	-	-	-
31	Sync. Output	V_{31}	-	-	-	-	-
32	H. Output	V_{32}	-	-	-	-	-
33	H. AFC	V_{33}	-	7.00	7.50	8.00	V
34	$32f_H$ VCO	V_{34}	-	5.50	6.00	6.50	V
35	D. GND	GND		-	0.00	-	V
36	ABL	V_{36}	BRT, COL Cent	2.90	3.40	3.90	V
37	TV Input	V37		2.90	3.00	3.90	V
38	ACL	V38	BRT, COL Cent	2.90	3.40	3.90	V

PIN NO.	CHARACTERISTIC	SYM-BOL	TEST CONDITION	MIN.	TYP.	MAX	UNIT
39	EXT. Video Input	V_{39}	-	1.10	1.60	2.10	V
40	Black DET	V_{40}	-	6.10	6.60	7.10	V
41	AV/SW Output	V_{41}	-	1.80	2.30	2.80	V
42	DC Rest	V_{42}	-	5.50	6.00	6.50	V
43	Y Input	V_{43}	-	4.00	4.50	5.00	V
44	AFT	V_{44}	-	2.00	2.50	3.00	V
45	Chroma Input	V_{45}	-	1.60	1.85	2.10	V
46	V / C / D Vcc	V_{46}	-	-	9.00	-	V
47	TV DET. Output	V_{47}	-	4.70	5.20	5.70	V
48	SIF Vcc	V_{48}	-	-	9.00	-	V
49	PIF Tank	V_{49}	-	-	-	-	V
50	PIF Tank	V_{50}	-	-	-	-	V
51	SIF GND	Vcc	-	-	0.00	-	V
52	Limiter Input	V_{52}	-	-	0.00	0.50	V
53	Audio TV Input	V_{53}	-	2.50	3.00	3.50	V
54	De-emphasis	V_{54}	Pin4 GND	4.00	4.50	5.00	V
55	EXT. Audio Input	V_{55}	-	2.50	3.00	3.50	V

Current Consumption

CHARACTERISTIC	SYMBOL	TEST CONDITION	MIN.	TYP.	MAX.	UNIT
IF Power Supply Current	Icci	-	32.8	46	52.0	mA
V/C/D Power Supply Current	Iccv	-	52.7	71	76.8	mA
H.Vcc Power Supply Current	Icch	-	10.7	14	18.4	mA
D.Vcc Power Supply Current	Iccd	-	5.2	10	11.6	mA

AC CHARACTERISTICS (Unless Otherwise Specified, Vcc = 9V, Ta = 25¡É)
PIF

CHARACTERISTIC	SYMBOL	TEST CONDITION	MIN	TYP	MAX	UNIT
Video Detected Output level	V_{01}	Note 1	1.7	2.0	2.3	Vp-p
	V_{02}		2.0	2.5	3.0	
Input Sensitivity	$V_{IN\ MIN}$	Note 2	-	42	-	dB¥ì
	$V_{IN\ MAX}$		100	107	-	
Sync Tip Level	V_{SYNC}	Note 3	2.6	2.9	3.2	V
Output Level For No Input	V_{IF}	Note 4	4.8	5.2	5.6	V
Differential Gain	DG	Note 5	-	2	5	%
Differential Phase	DP		-	2	5	¡£
PIF Output Frequency Characteristic	f_C	Note 6	5	7	-	MHz
Carrier Wave Compression Ratio	CR	Note 7	50	55	-	dB
2nd Harmonics Compression Ratio	HR		50	55	-	
PIF Input Resistance	R_{iPIF}	Note 8	-	1.5	-	k¥Ø
PIF Input Capacitance	C_{iPIF}		-	3.8	-	pF
S/N	S/N	Note 9	52	55	-	dB
920kHz Beat	I_{920}	Note 10	42	45	-	dB
IF AGC Range	RW_{AGC}	Note 11	61	65	69	dB
IF AGC Voltage	V_{5MEAN}	Note 12	4.2	4.5	4.8	V
	V_{5MAX}		7.4	7.6	-	
	V_{5MIN}		-	3.8	-	
RF AGC Voltage	V_{3MAX}	Note 13	7.7	8.2	-	V
	V_{3MIN}		-	0	0.5	
RF AGC Control Range	¥ÄGRFAGC	Note 14	35	40	-	dB
AFT Center Voltage	V_{4CENT}	Note 15	2.2	2.5	2.8	V
AFT Voltage	V_{4MAX}	Note 16	4.4	4.8	-	V
	V_{4MIN}		-	0.2	0.5	
AFT Sensitivity	¥ìAFT	Note 17	-	40	-	kHz/V
AFT Output Resistance	RAFTOUT	Note 18	40	50	60	k¥Ø
PIF VCO Control Sensitivity	¥âIFVCO	Note 19	2.0	2.5	-	MHz/V
PIF VCO Pull-in Range	fph	Note 20	1.0	1.5	-	MHz
	fPI		1.0	1.5	-	
PIF VCO Control Range	¥Äf PIFVCO	Note 21	-	4.4	-	MHz

SIF

CHARACTERISTIC	SYMBOL	TEST CONDITION	MIN.	TYP.	MAX.	UNIT
Sound Output Level	VAAC	Note 22	400	500	600	mVrms
	VADC		-	4.5	-	V
Sound Distortion	VAUDIO	Note 23	-	0.3	1.0	%
AMR	AMR	Note 24	50	60	-	dB
Limiting Sensitivity	VLIM	Note 25	-	35	-	dB¥V
Sound Output Frequency Characteristics	fAUDIOH	Note 26	-	130	-	kHz
	fAUDIOL		-	-130	-	
Sound Output Resistance	RSOUT	Note 27	24	30	36	k¥Ø

ATT

ATT Gain	GATTMAXE	Note 28	-2.0	0.0	2.0	dB
	GATTMAXT		4.0	6.0	8.0	
	GATTMEAN		-16	-12	-9	
	GATTMIN		-99	-85	-	
DC Voltage Drift	V1VAR	Note 29	-	-	50	mV
	V1DC		3.2	3.7	4.2	V
Input Impedance	Ri53	Note 30	-	30	-	k¥Ø
	Ri55		-	47	-	

Video

Input Impedance	R_{i41}	Note 31	100	-	-	k¥Ø
Input Dynamic Range	V_{di41}	Note 32	1.0	1.2	1.5	V
Video Total Gain	G_Y	Note 33	4.5	5.0	-	
Video Frequency Characteristic	f_Y	Note 34	6.0	7.0	-	MHz
Maximum Output	V_{do1}	Note 35	7.5	8.0	-	V
Blackexpanion Amp. Gain	G_{BAMP}	Note 36	1.18	1.43	1.68	
Black Expansion Start Point	G_{BSTP}		40	50	60	IRE
Dc Restoration	T_{DC}	Note 37	100	103	105	%
Sharpness Control Characteristics	G_{SHcent}	Note 38	1	4	7	dB
	G_{SHmax}		9	12	15	
	G_{SHmin}		-	-18	-15	
Sharpness Delay Time	t_{SHDLY}	Note 39	-	125	-	ns
Cnotrast Control Characteristics	G_{CNcent}	Note 40	4.5	6	7.5	dB
	G_{CNmin}		22.5	24	28.5	
H. V - BLK Output Voltage	V_{BLK}	Note 41	-	0.7	1.0	V
V-BLK Width	T_{VBLK}	Note 42	-	3.5~24	-	H
f_{SC} Trap Gain	G_{TRAP}	Note 43	-	-28	-20	dB

OSD

CHARACTERISTIC	SYMBOL	TEST CONDITION	MIN.	TYP.	MAX.	UNIT
Osd Switching Voltage	VthOSD	Note 44	0.7	1.0	1.3	V
Osd Delay Time	tOSDDLY	Note 45	-	15	30	ns
Osd Delay Time Difference	tOSDD		-	5	10	
Osd Rising Time	¥óR		-	15	30	
OSD Falling Time	¥óF		-	15	30	
Input Clamp Voltage	VOSDC	Note 46	4.4	4.9	5.4	V
OSD Gain	GOSD	Note 47	1.8	2.0	2.2	V
Input Dynamic Range	VdiOSD	Note 48	2.0	2.2	2.4	V

Cutoff Drive

Brightness Control Characteristics	VBRTmax	Note 49	3.6	4.0	4.3	V
	VBRTcen		2.4	2.7	3.0	
	VBRTmin		1.0	1.4	1.7	
Brightness Control Difference Between 3Axes	¥ÄVRGB	Note 50	-50	0	50	mV
Cutoff Control Characteristics	Vcutmax	Note 51	0.5	0.65	0.8	V
	Vcutcen		-	0.00	-	
	Vcutmin		-0.8	-0.65	-0.5	
Drive Control Characteristics	Gdrvmax	Note 52	3.75	4.25	4.75	dB
	Gdrvmin		-4.0	-3.5	-3.0	

Chroma

Input Dynamic Range	Vdi45	Note 53	0.95	1.5	1.7	V
ACC Characteristic	ea	Note 54	-23	-20	-17	dB
	eb		3	6	9	
	A		0.9	1.0	1.1	
Killer Point	EK	Note 55	-48	-46	-43	dB
VCXO Frequency Control Range	¥Äf VCXO	Note 56	¡¾ 500	¡¾ 600	-	Hz
VCXO Frequency Control Sensitivity	¥âVCXO	Note 57	-	1.0	-	Hz/mV
VCXO Pull-in Range	fVCXOPL	Note 58	¡¾ 300	¡¾ 450	-	Hz
Demodulate Relative Gain	R / B	Note 59	0.80	0.84	0.90	
	G / B		0.25	0.29	0.33	
Demodulate Relative Phase	R - B		101	108	115	¡£
	G - B		236	243	250	
Carrier Wave Remain	ECR	Note 60	-	20	40	mVp-p
	ECB		-	20	40	
	ECG		-	20	40	

CHARACTERISTIC	SYMBOL	TEST CONDITION	MIN.	TYP.	MAX.	UNIT
Color Control Characteristic	VCLRmax	Note 61	3.9	4.1	4.3	Vp-p
	GCLRcen		4.5	6	7.5	dB
	GCLRmin		38	40	-	
Uni-color Control Characteristic	GUNIcen	Note 62	4.5	6	7.5	dB
	GUNImin		22	24	26	
TINT Control Characteristic	¥ÈTNTcen	Note 63	-7	0	7	¢£
	¥Ä¥ÈTNT		¡¾ 35	¡¾ 45	¡¾ 55	
Video Chroma Delay Time	tv - c	Note 64	-30	0	30	ns

Deflection

Horizontal Free Run Freq.	fH	Note 65	-100	0	100	Hz
H. Out Pulse Duty	TH	Note 66	38	41	44	%
H. Out Voltage	VHL	Note 67	-	0.2	0.3	V
	VHH		2.5	3.0	3.5	
VCO Osc. Start Voltage	VOSCmin	Note 68	3.0	3.5	4.0	V
H. Out Start Voltage	VHST	Note 69	3.7	4.0	-	V
H. Frequency Control Range	¥ÄfH	Note 70	¡¾ 500	¡¾ 650	-	Hz
H. Freq. Control Sensitivity	¥âH	Note 71	-	500	-	Hz/V
H. Sync. Pull-in Range	¥ÄfHPUL	Note 72	¡¾ 450	¡¾ 500	-	Hz
H. Pull-in Stop Period	THSTP	Note 73	-	259 ~272	-	H
AFC-2 Control Range	TAFC2	Note 74	16	17	-	¥ß
Horizontal Position Adjustment	TPAFC2	Note 75	-	¡¾ 3	-	¥ß
X-RAY Protection Detection Voltage	VXDET	Note 76	3.35	3.5	3.65	V
X-RAY Protection Hold Voltage	VXHLD		3.9	4.2	4.5	
X-RAY Protection Hold Current	VXLD		80	100	120	¥ìA
Vertical Free Run Freq.	fV	Note 77	-	295	-	H
V. Sync. Pull-in Range	TVST	Note 78	-	224	-	H
	TVEND		-	295	-	
V. Out Pulse Width	TV	Note 79	-	8	-	H
V. Ramp Amplitude Control	VVL	Note 80	2.2	2.4	-	V
	VVH		-	1.6	1.8	
H. Sync. Separation Level	Rsepa	Note 81	30	35	40	%
Forced V. Osc. (262.5H)	fV60	Note 82	-	60	-	Hz

SIGNAL FOR MEASUREMENT

¨ç Input Signal 1

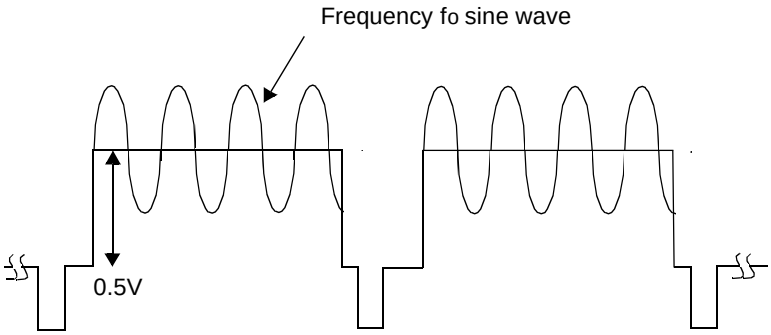

¨è Input Signal 2

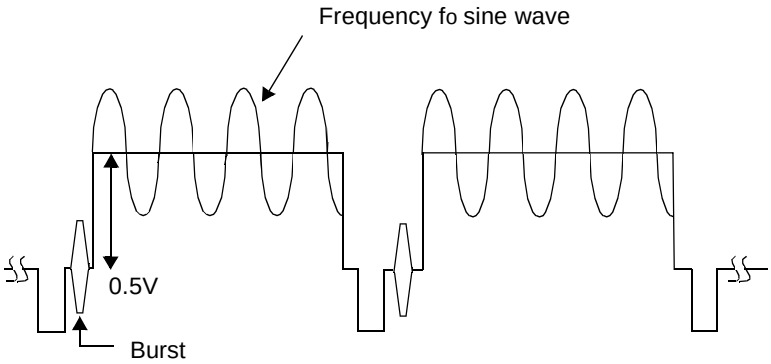
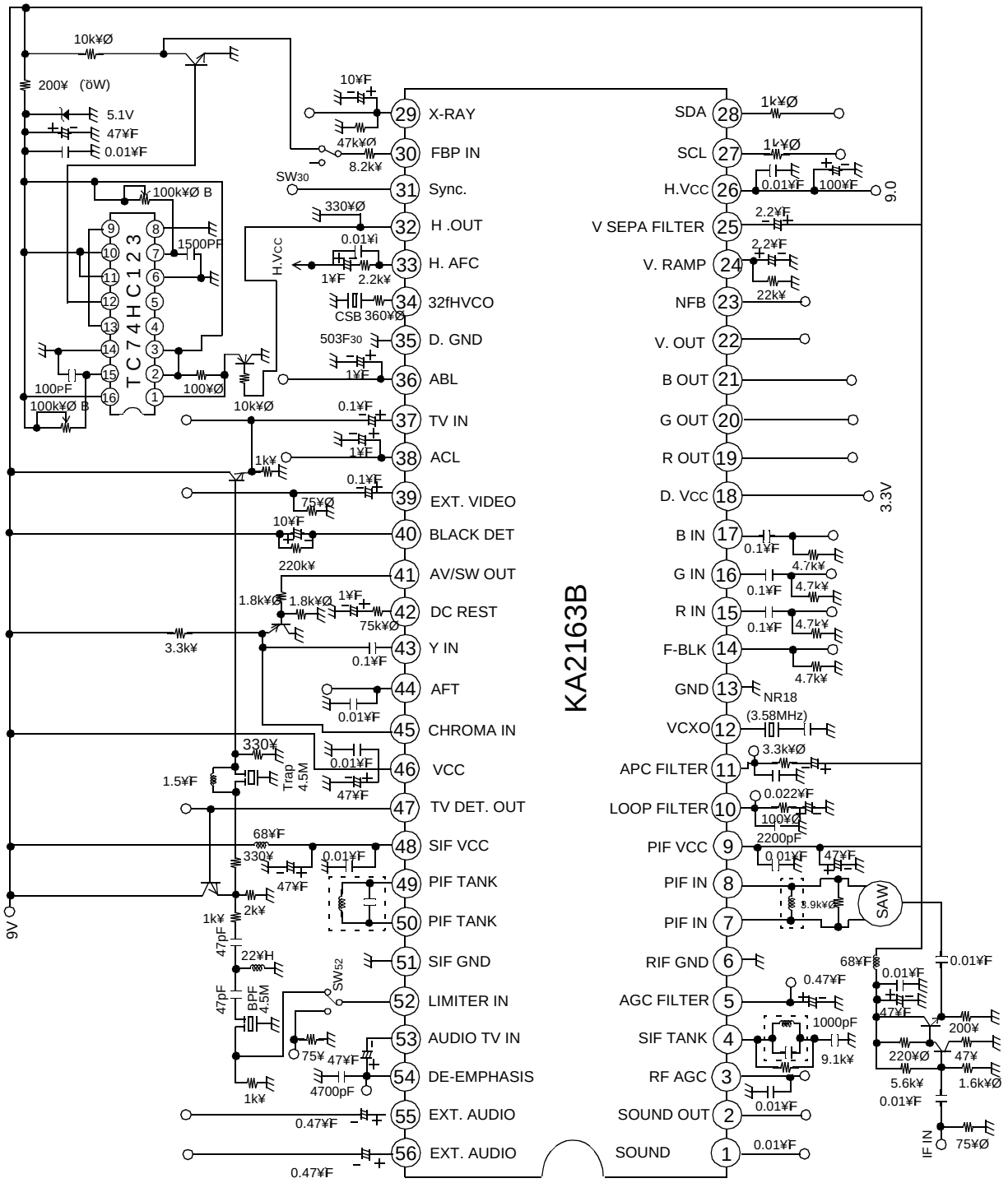
TEST CIRCUIT