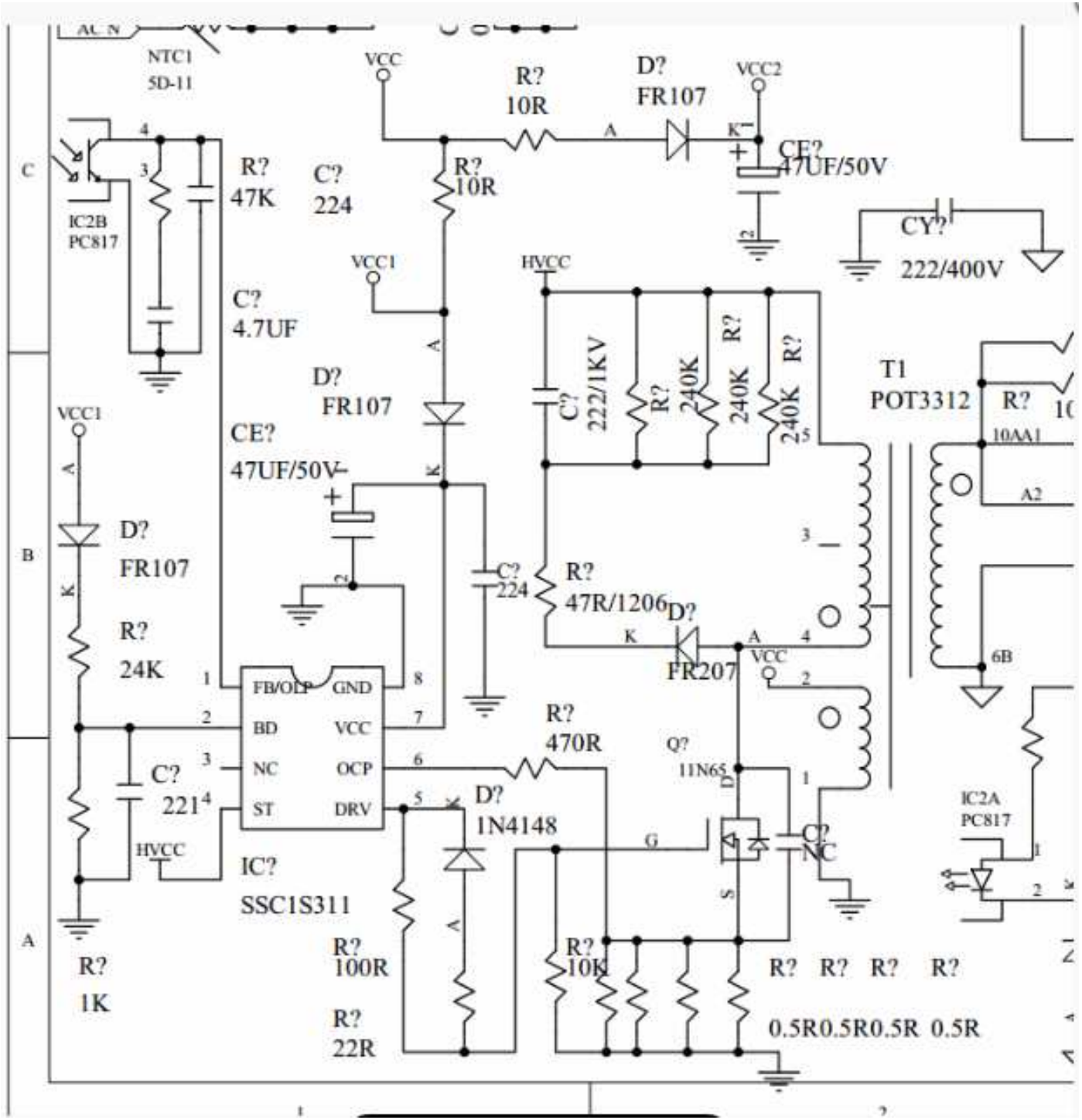
AC N
NTC1
5D-11
VCC
R?
10R
D?
FR107
VCC2
CE?
47UF/50V
IC2B
PC817
R?
47K
C?
224
R?
10R
CY?
222/400V
VCC1
HVCC
C?
4.7UF
D?
FR107
C?
222/1KV
R?
240K
R?
240K
R?
240K
T1
POT3312
R?
10AA1
A2
6B
VCC1
CE?
47UF/50V
D?
FR107
R?
24K
C?
224
R?
47R/1206
D?
FR207
VCC
FB/OLP
GND
BD
VCC
NC
OCP
ST
DRV
R?
470R
Q?
11N65
C?
221
D?
1N4148
C?
NC
IC2A
PC817
HVCC
IC?
SSC1S311
R?
1K
R?
100R
R?
10K
R? R? R? R?
R?
22R
0.5R0.5R0.5R 0.5R