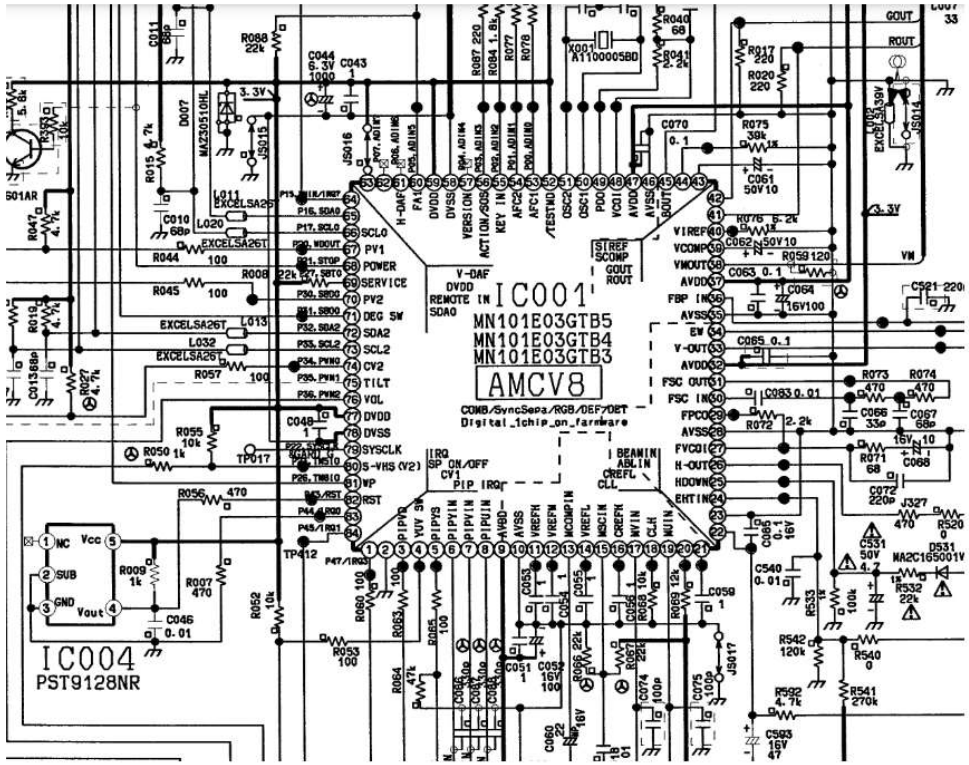
IC001
MN101E03GTB5
MN101E03GTB4
MN101E03GTB3
AMCV8
COMB/SyncSepa/RGB/DEF/DET
Digital_1chip_on_farmware
IC004
PST9128NR
X001
A1100005BD
SCL0
PV1
POWER
SERVICE
PV2
DEG SW
SDA2
SCL2
CV2
TILT
VOL
DVDD
DVSS
SYSCLK
S-VHS (V2)
WP
RST
V-DAF
DVDD
REMOTE IN
SDAO
IRQ
SP ON/OFF
CV1
PIP IRQ
BEANIN
ABLIN
CREFL
CLL
GOUT
ROUT
VM
3.3V
VIREF
VCOMP
VMOUT
AVDD
FBP IN
AVSS
EW
V-OUT
FSC OUT
FSC IN
FPCO
FVCO
H-OUT
HDOWN
EHTIN
NC
Vcc
SUB
GND
Vout