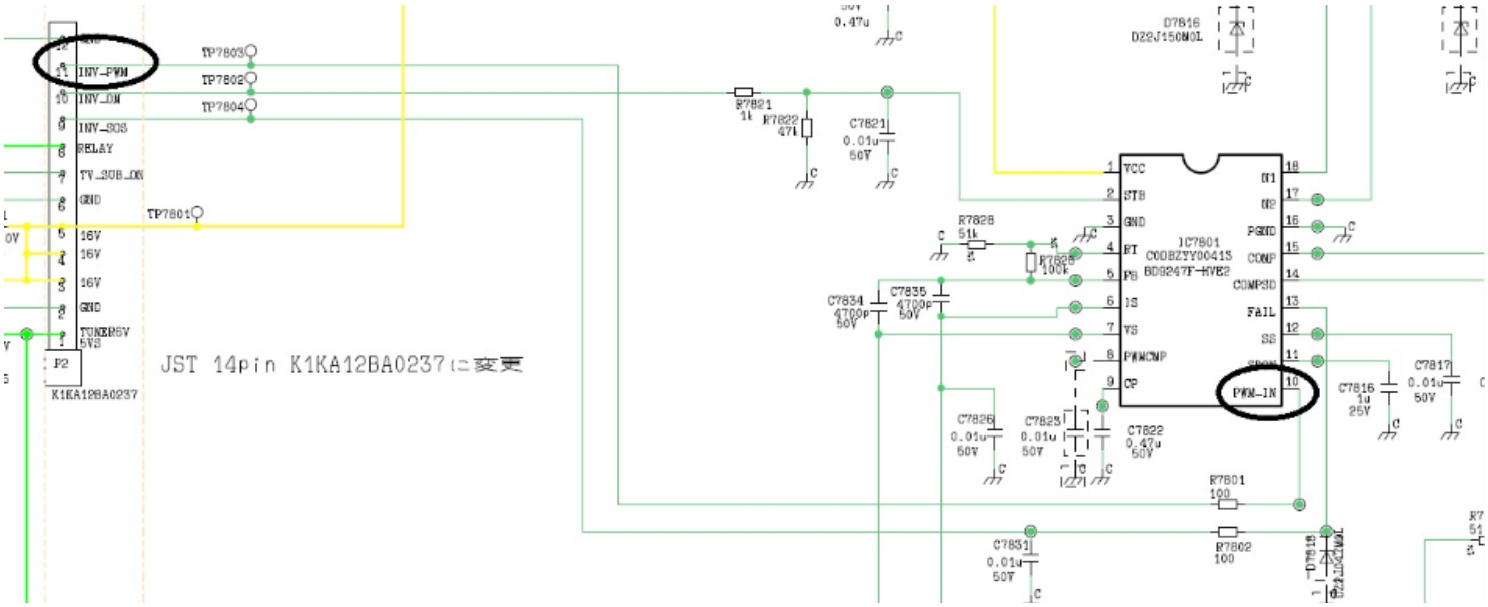
INV_PWM
INV_ON
INV_SOS
RELAY
TV_SOB_ON
GND
16V
16V
16V
GND
TUNER5V
5VS
P2
K1KA12BA0237
JST 14pin K1KA12BA0237に変更
TP7803
TP7802
TP7804
TP7801
R7821
1k
R7822
471
C7821
0.01u
50V
D7616
D2SJ150M0L
IC7801
C0DBZYY00413
BD9247F-HVE2
VCC
STB
GND
RT
PB
IS
VS
PWMCMP
CP
OU1
OU2
PGND
COMP
COMP3D
FAIL
SS
PWM-IN
R7828
51k
R7829
100k
C7834
4700p
50V
C7835
4700p
50V
C7826
0.01u
50V
C7823
0.01u
50V
C7822
0.47u
50V
C7816
1u
25V
C7817
0.01u
50V
R7801
100
R7802
100
C7831
0.01u
50V
D7618
D2SJ150M0L