Specification
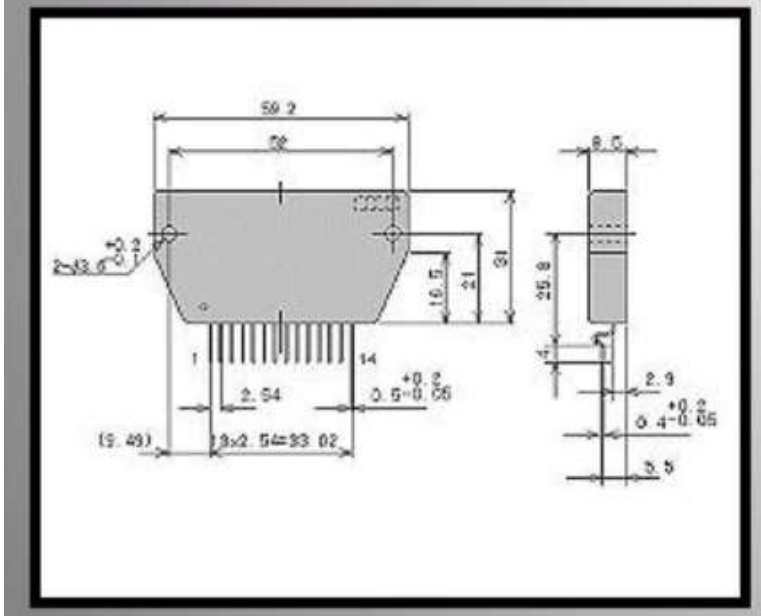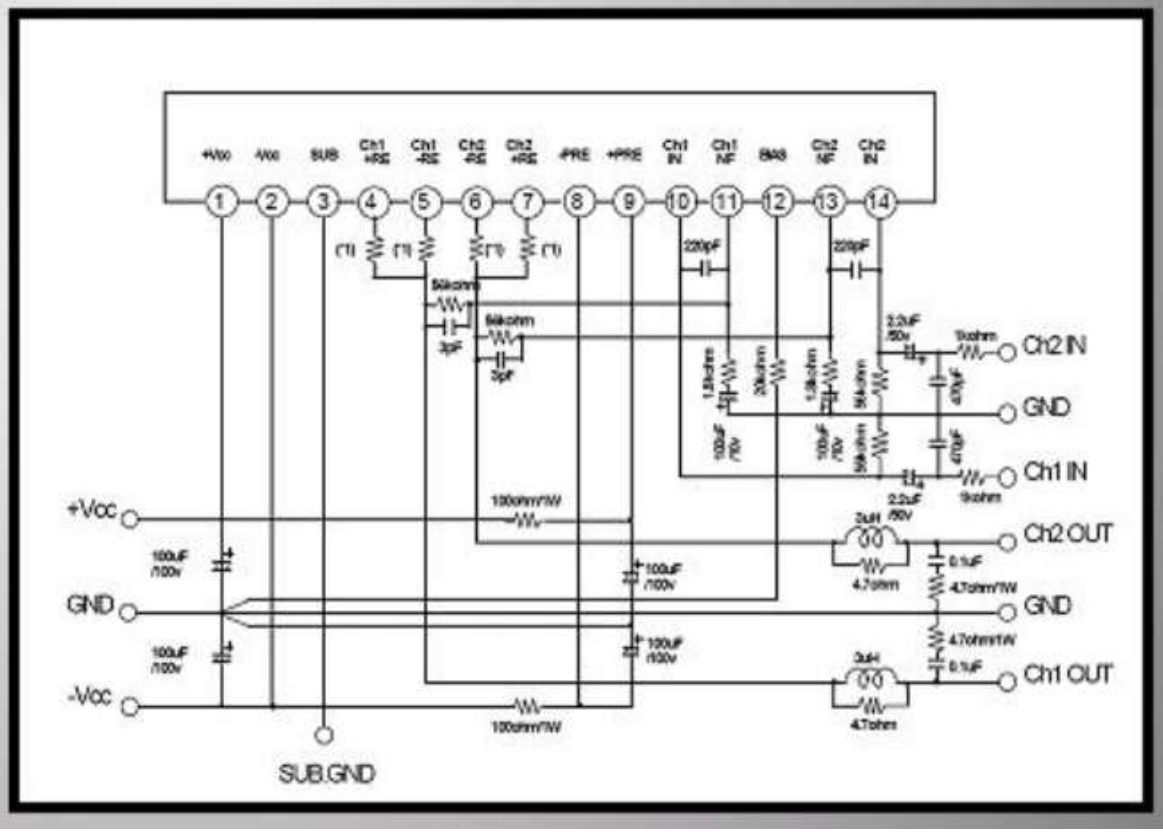
					Min.	Typ.	Max.
Supply voltage	Vcc	±42V	Neutral voltage	Vn	-70mV	0	70mV
Max.Supply voltage	V_{CCmax}	±64V	Quiescent Current	Icco	n/a mA	n/a mA	80mA
Input impedance	Ri	55kohm					
Thermal resistance	Θ j-c	1.9 °C/W	Max. Coll. Current	Icc			
Junction temperature	Tj	150 °C	Total harmonic dist.	THD			0.2%
Operating IC substrate temp.	Tc	125 °C	Output Power	Po		2x120W	
Storage temperature	Tstg	-30...+125 °C	Outp. Noise Voltage	Vno			1.0mVrms