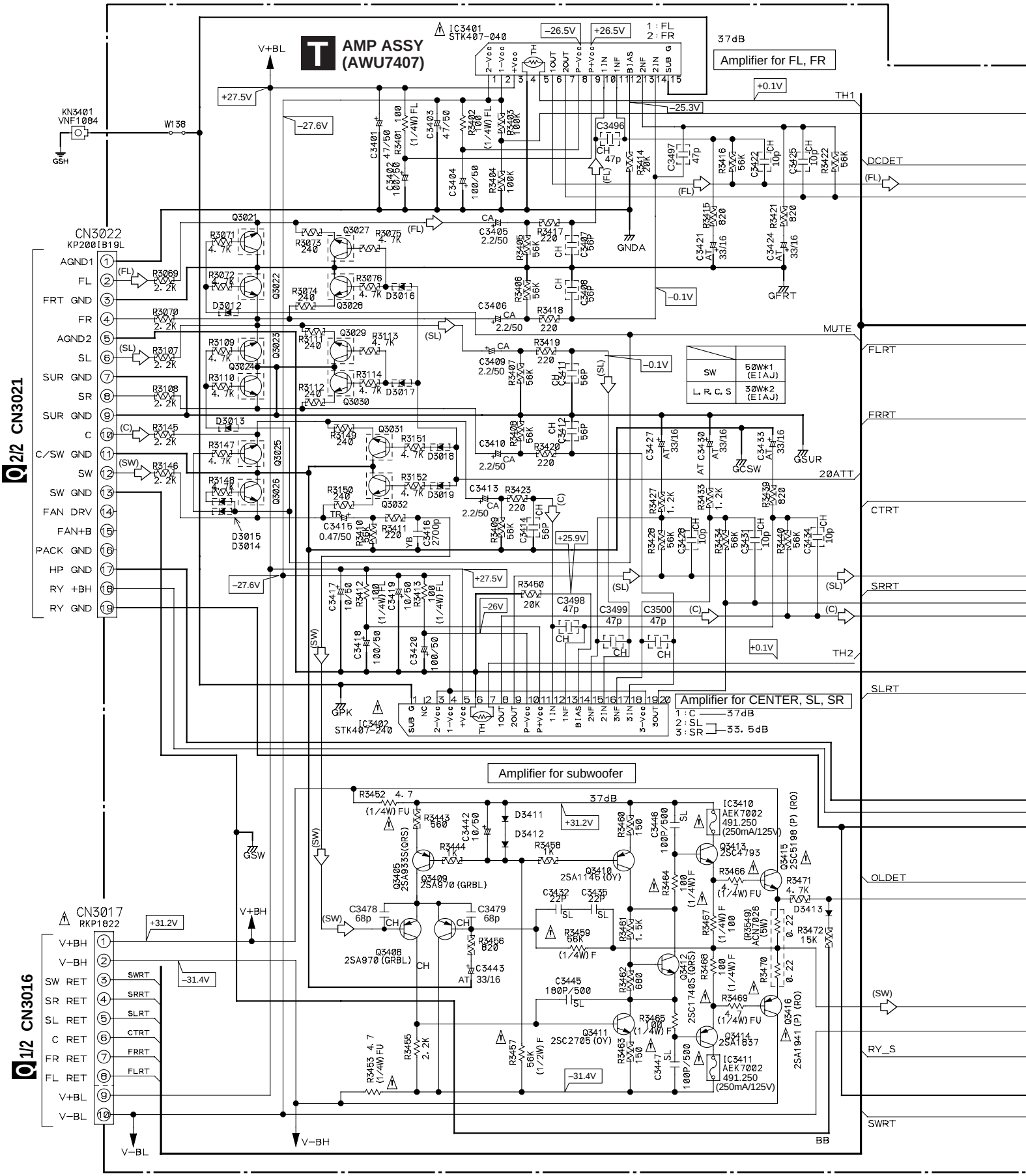3.2.7 AMP ASSY, HP ASSY and SWF ASSY