GB98A

FEATURES

- Boost converter controller for up to four strings of high power LEDs
- Integrated transistors for LED current balance control circuit
- Supports both analog and direct PWM dimming control
- Time-shift PWM phase dimming control for low audible noise
- Built-in converter for PWM signal to analog dimming control conversion
- Wide range dimming control
- Supports single power train, multiple-IC parallel operation
- Power MOSFET over-current protection
- LED short circuit and open string protection
- LED return to ground short circuit protection
- Thermal protection

GENERAL DESCRIPTION

GB98A is a high efficiency, high power LED driver controller that provides high voltage MOSFET driver for the boost converter. It can drive up to four strings of LEDs at 250mA current rating. It also supports up to 400mA pulsing current for applications.

GB98A receives external Pulse Width Modulation (PWM) signal input for dimming control.

APPLICATIONS

- LCD Monitor
- LCD TV

APPLICATION DIAGRAM

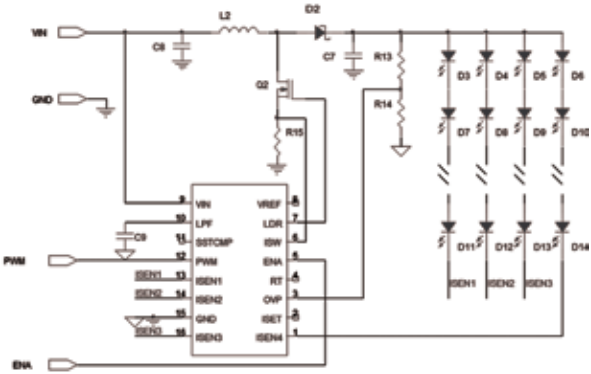

U.S. Patent #'s 7,498,793; 7,847,783; and more patents pending.