MC78L00A Series, NCV78L00A

100 mA Positive Voltage Regulators

The MC78L00A Series of positive voltage regulators are inexpensive, easy−to−use devices suitable for a multitude of applications that require a regulated supply of up to 100 mA. Like their higher powered MC7800 and MC78M00 Series cousins, these regulators feature internal current limiting and thermal shutdown making them remarkably rugged. No external components are required with the MC78L00 devices in many applications.

These devices offer a substantial performance advantage over the traditional zener diode−resistor combination, as output impedance and quiescent current are substantially reduced.

Features

- Wide Range of Available, Fixed Output Voltages
- Low Cost
- Internal Short Circuit Current Limiting
- Internal Thermal Overload Protection
- No External Components Required
- Complementary Negative Regulators Offered (MC79L00A Series)
- NCV Prefix for Automotive and Other Applications Requiring Unique Site and Control Change Requirements; AEC−Q100 Qualified and PPAP Capable
- These are Pb−Free Devices

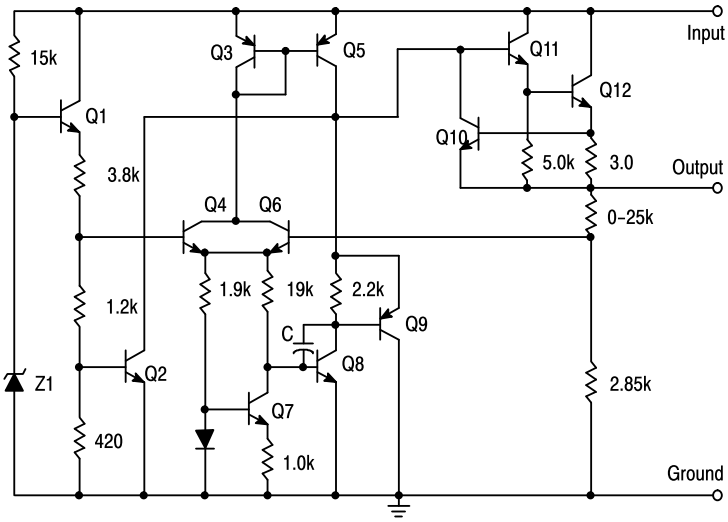

Figure 1. Representative Schematic Diagram

ON Semiconductor®

www.onsemi.com

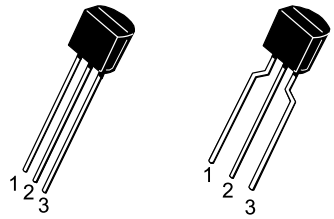

STRAIGHT LEAD BULK PACK

BENT LEAD TAPE & REEL AMMO PACK

TO−92
P SUFFIX
CASE 029

Pin: 1. Output
2. Ground
3. Input

SOIC−8*
D SUFFIX
CASE 751

SOT−89
CASE 528AG

*SOIC−8 is an internally modified SO−8 package. Pins 2, 3, 6, and 7 are electrically common to the die attach flag. This internal lead frame modification decreases package thermal resistance and increases power dissipation capability when appropriately mounted on a printed circuit board. SOIC−8 conforms to all external dimensions of the standard SO−8 package.

PIN CONNECTIONS

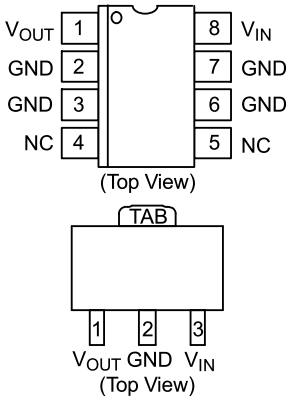

ORDERING INFORMATION

See detailed ordering and shipping information in the package dimensions section on page 9 of this data sheet.

DEVICE MARKING INFORMATION

See general marking information in the device marking section on page 12 of this data sheet.

© Semiconductor Components Industries, LLC, 1999