SHINDENGEN

Switching Power Transistor

FS Series

2SC4663
(TP5V20FS)

5A NPN

OUTLINE DIMENSIONS

Case : ITO-220

Unit : mm

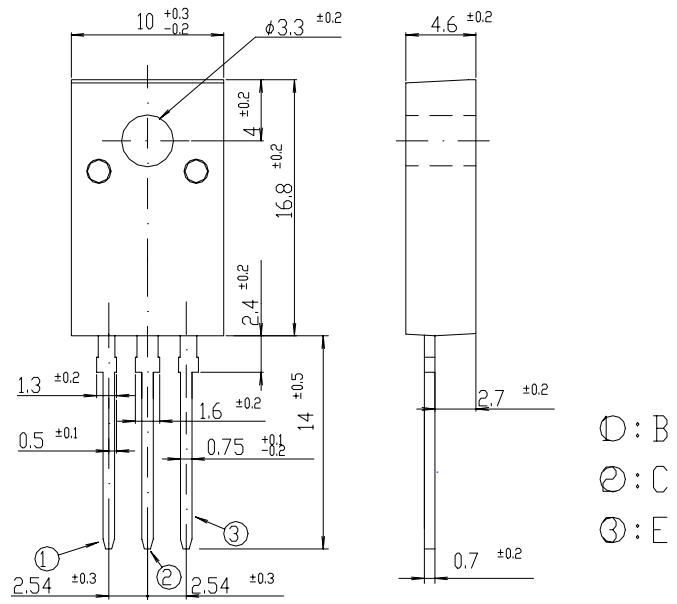

RATINGS

●Absolute Maximum Ratings

Item	Symbol	Conditions	Ratings	Unit
Storage Temperature	Tstg		−55～150	℃
Junction Temperature	Tj		150	℃
Collector to Base Voltage	V_{CBO}		250	V
Collector to Emitter Voltage	V_{CEO}		200	V
Emitter to Base Voltage	V_{EBO}		7	V
Collector Current DC	I_C		5	A
Collector Current Peak	I_{CP}		10	
Base Current DC	I_B		2	A
Base Current Peak	I_{BP}		4	
Total Transistor Dissipation	P_T	Tc = 25℃	25	W
Dielectric Strength	Vdis	Terminals to case, AC 1 minute	2	kV
Mounting Torque	TOR	(Recommended torque : 0.3N･m)	0.5	N･m

●Electrical Characteristics (Tc=25℃)

Item	Symbol	Conditions	Ratings	Unit
Collector to Emitter Sustaining Voltage	V_{CEO}(sus)	I_C = 0.1A	Min 200	V
Collector Cutoff Current	I_{CBO}	At rated Voltage	Max 0.1	mA
	I_{CEO}		Max 0.1	
Emitter Cutoff Current	I_{EBO}	At rated Voltage	Max 0.1	mA
DC Current Gain	h_{FE}	V_{CE} = 2V, I_C = 2.5A	10～25*1	
	h_{FEL}	V_{CE} = 2V, I_C = 1mA	Min 10	
Collector to Emitter Saturation Voltage	V_{CE}(sat)	I_C = 2.5A	Max 1.0	V
Base to Emitter Saturation Voltage	V_{BE}(sat)	I_B = 0.5A	Max 1.5	V
Thermal Resistance	θ jc	Junction to case	Max 5.0	℃/W
Transition Frequency	f_T	V_{CE} = 10V, I_C = 0.5A	TYP 13	MHz
Turn on Time	ton	I_C = 2.5A	Max 0.3	μ s
Storage Time	ts	I_{B1} = 0.5A, I_{B2} = 1A	Max 1.0	
Fall Time	tf	R_L = 60Ω, V_{BB2} = 4V	Max 0.1	

Copyright & Copy;2000 Shindengen Electric Mfg.Co.Ltd